Data structures and Algorithms

Lecture 8: Graphs
[GT 13.1-3]

Lecturer: Dr. Armin Chitizadeh

Inspired by lectures by Dr. Karlos Ishac and Dr. Andre van Renssen.

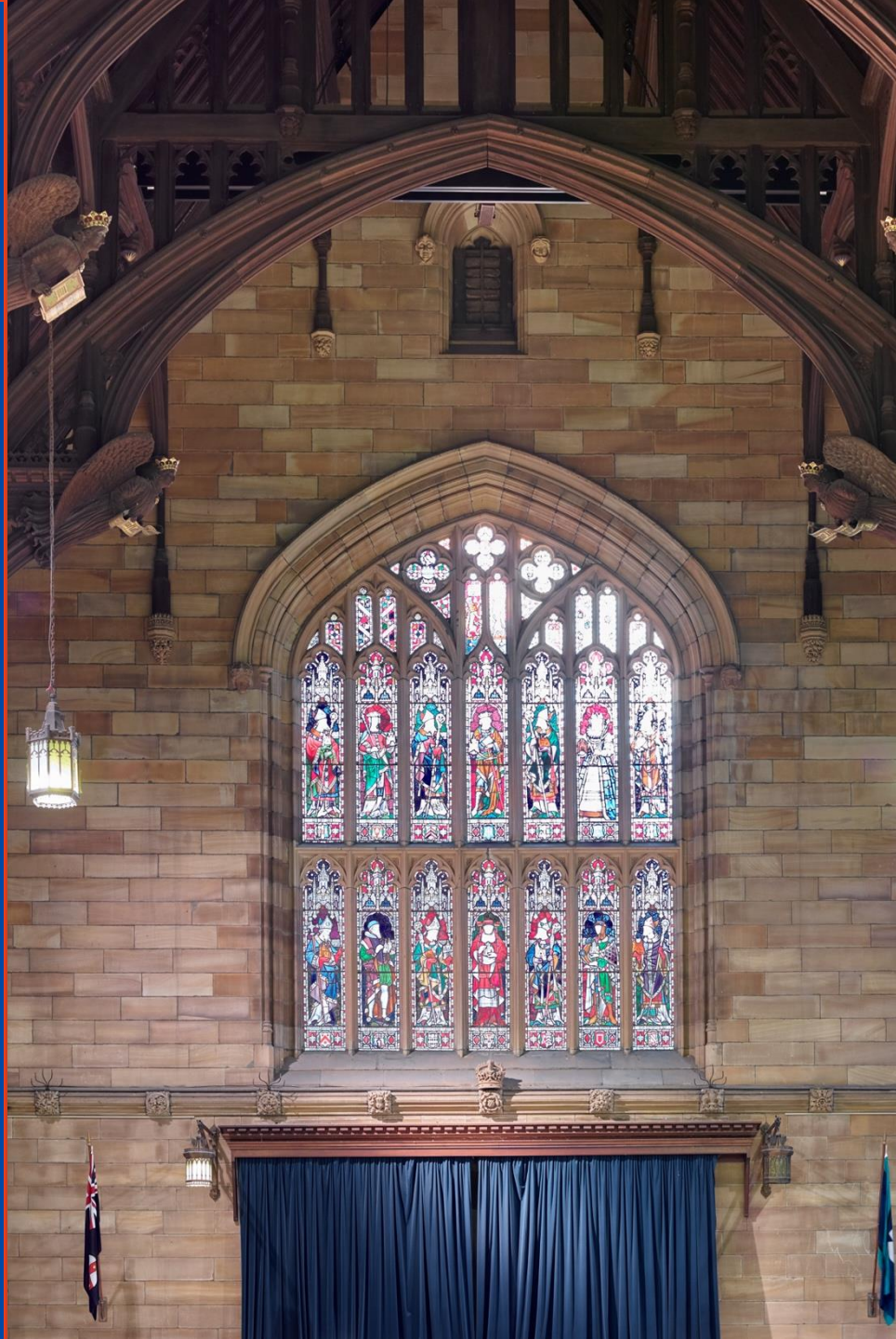

Graphs

A graph **G** is a pair (***V, E***), where

- ***V*** is a set of nodes, called vertices
- ***E*** is a collection of pairs of vertices, called edges

Example:

- A vertex represents an airport and stores the three-letter airport code
- An edge represents a flight route between two airports and stores the mileage of the route

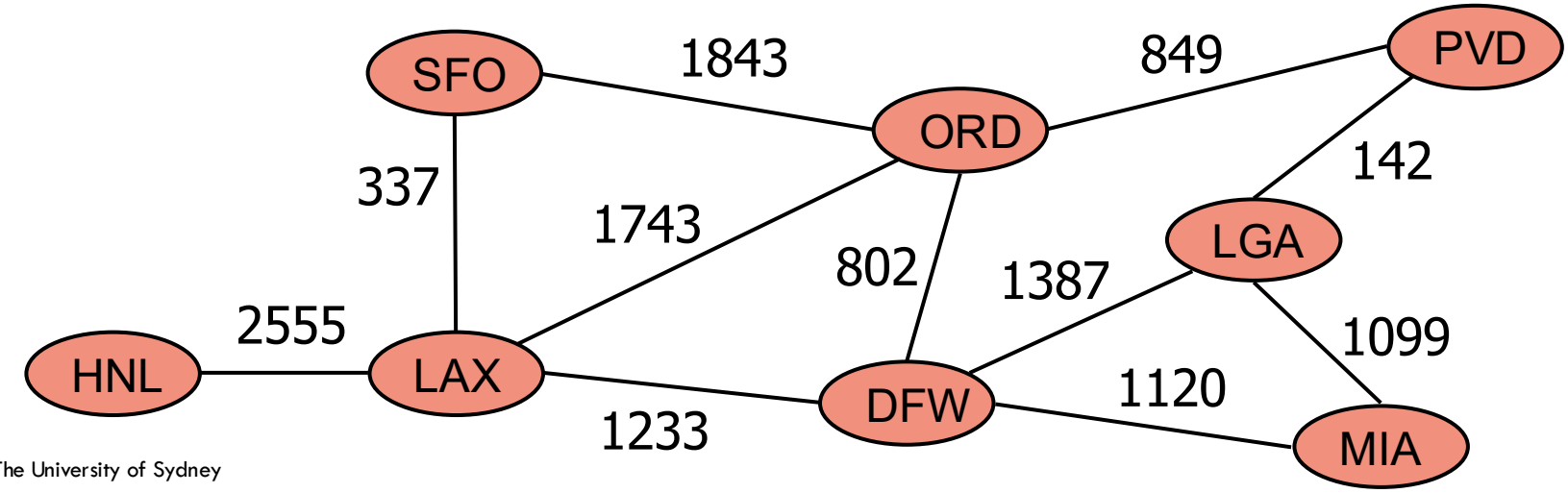

Edge Types

Directed edge

- ordered pair of vertices (u, v)
- u is the origin/tail
- v is the destination/head
- e.g., a flight

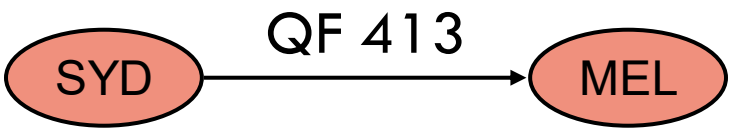

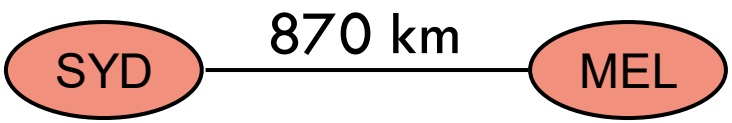

Undirected edge

- unordered pair of vertices (u, v)
- e.g., a two-way road

Applications

Electronic circuits

- Printed circuit board
- Integrated circuit

Transportation networks

- Highway network
- Flight network

Computer networks

- Internet
- Web

Modeling

- Entity-relationship diagram
- Gantt precedence constraints

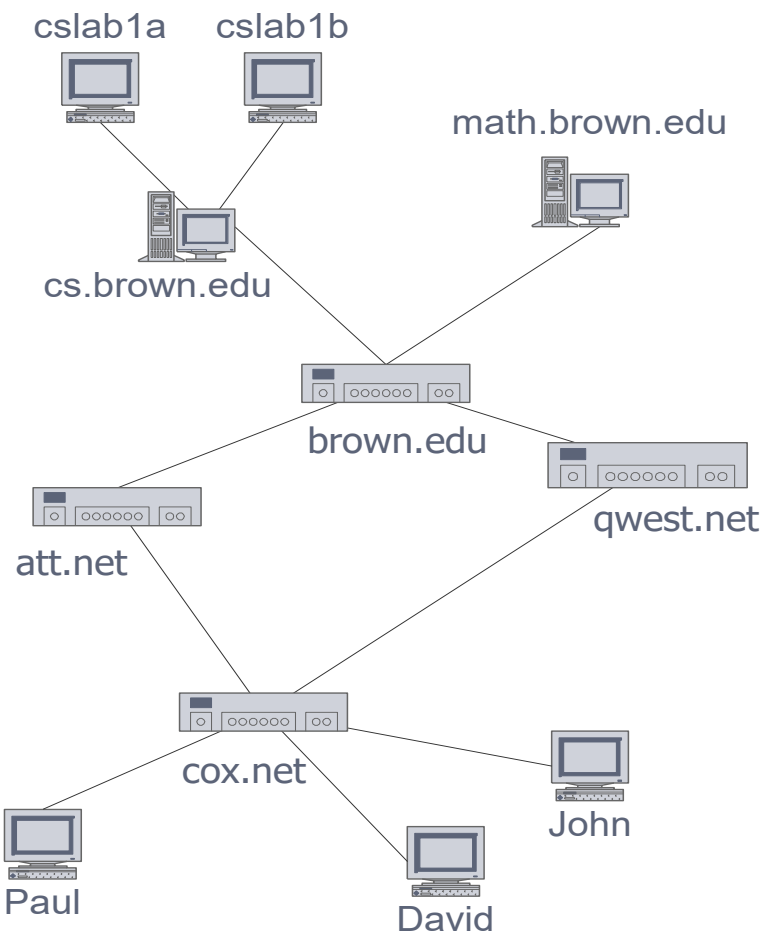

Graph concepts: Paths

A path is a sequence of vertices such that every pair of consecutive vertices is connected by an edge.

A simple path is one where all vertices are distinct

Examples

- (V, X, Z) is a simple path
- (U, W, X, Y, W, V) is a path that is not simple

A (simple) path from s to t is also called an s-t path.

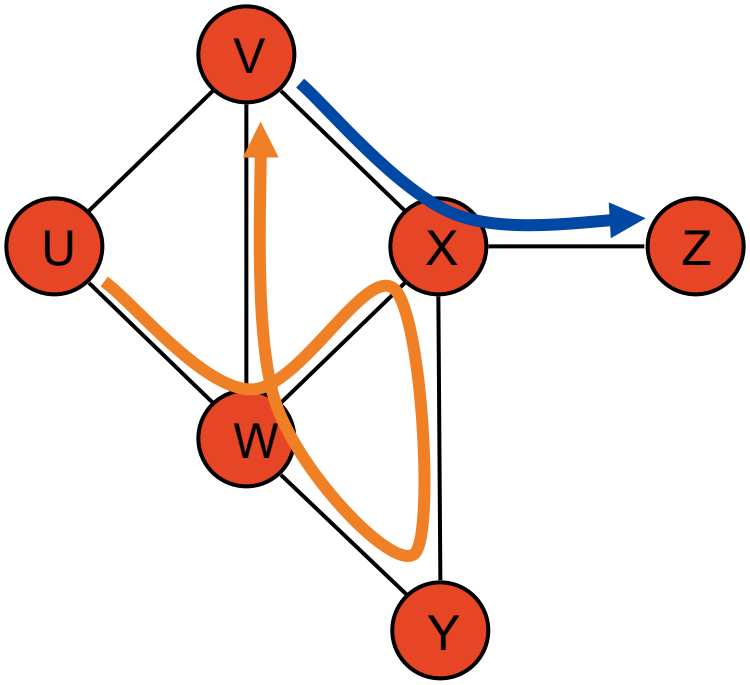

Graph concepts: Cycles

A cycle is defined by a path that starts and ends at the same vertex

A simple cycle is one where all vertices are distinct

Examples

- (V, X, Y, W, U, V) is a simple cycle
- (U, W, X, Y, W, V, U) is a cycle that is not simple

An acyclic graph has no cycles

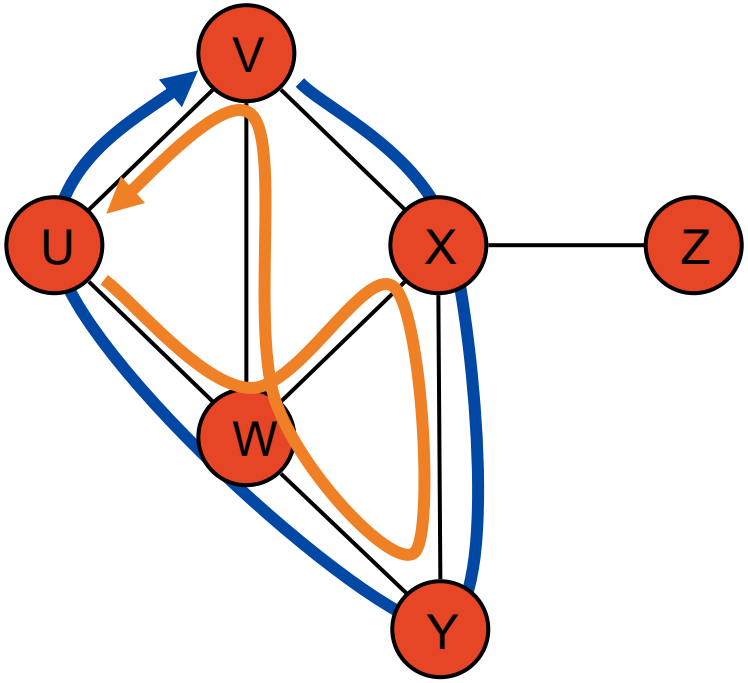

Graph concepts: Subgraphs

Let $G=(V, E)$ be a graph. We say $S=(U, F)$ is a subgraph of G if $U \subseteq V$ and $F \subseteq E$

A subset $U \subseteq V$ induces a graph $G[U] = (U, E[U])$ where $E[U]$ are the edges in E with endpoints in U

A subset $F \subseteq E$ induces a graph $G[F] = (V[F], F)$ where $V[F]$ are the endpoints of edges in F

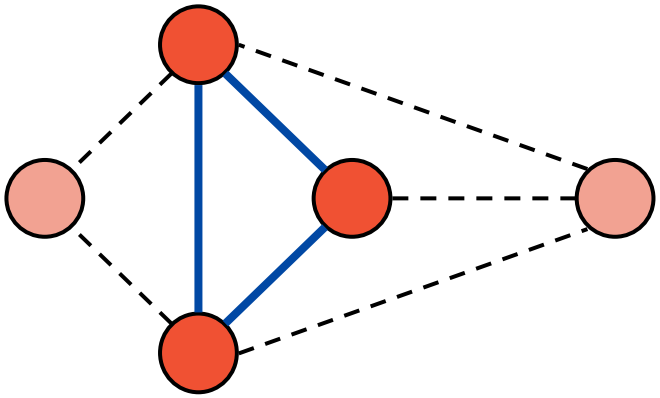

Subgraph induced by red vertices

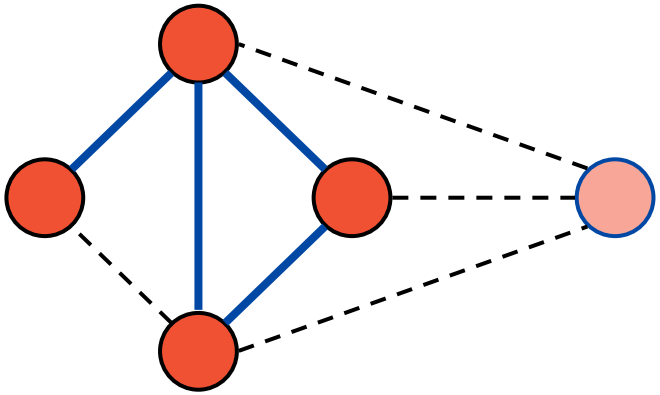

Subgraph induced by blue edges

Graph concepts: Connectivity

A graph G=(V, E) is connected if there is a path between every pair of vertices in V

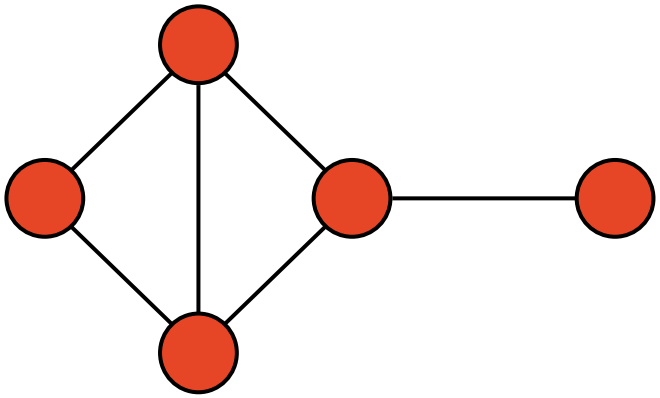

Connected graph

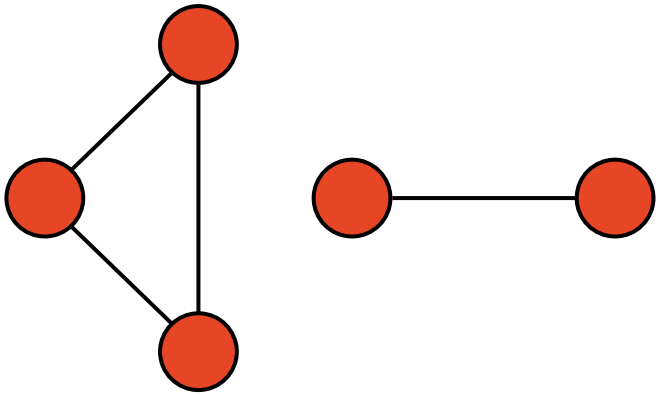

Graph with two connected components

Graph concepts: Trees and Forests

An unrooted tree T is a graph such that

- T is connected
- T has no cycles

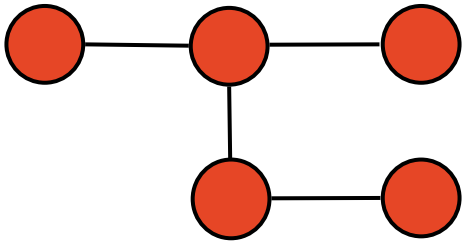

Tree

A forest is a graph without cycles. In other words, its connected components are trees

Fact: Every tree on n vertices has n-1 edges

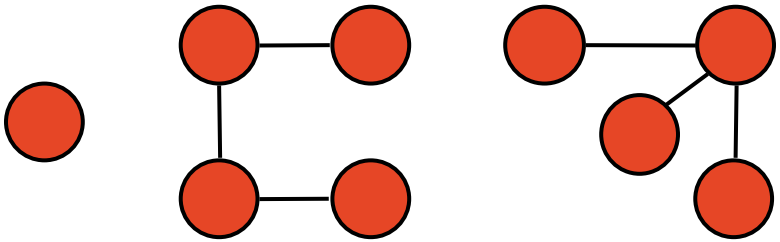

Forest

Spanning Trees and Forests

A spanning tree is a connected subgraph on the same vertex set

A spanning tree is not unique unless the graph is a tree

Spanning trees have applications to the design of communication networks

A spanning forest of a graph is a spanning subgraph that is a forest

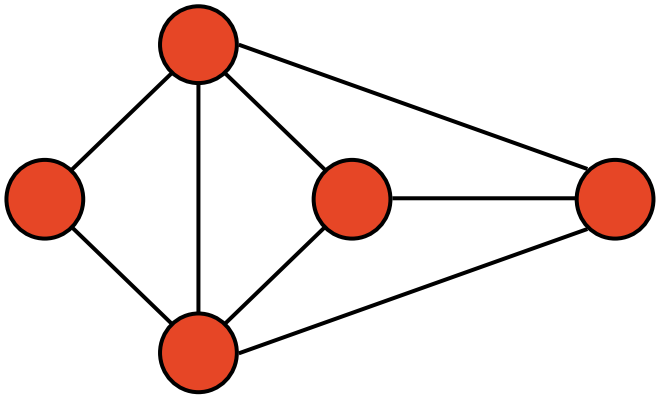

Graph

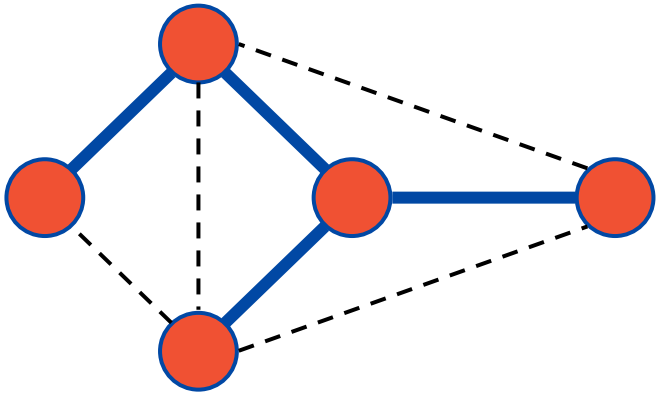

Spanning tree

Graph Properties

Fact: $\sum_{v \text{ in } V} \deg(v) = 2m$

Fact: In a simple undirected graph $m \leq n(n-1)/2$

Notation

n	number of vertices
m	number of edges
Δ	maximum degree

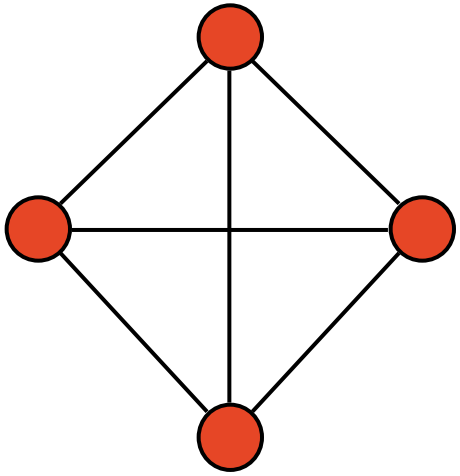

$n = 4$

$m = 6$

max deg $= 3$

Challenge 8A

List what kind of trees these are.

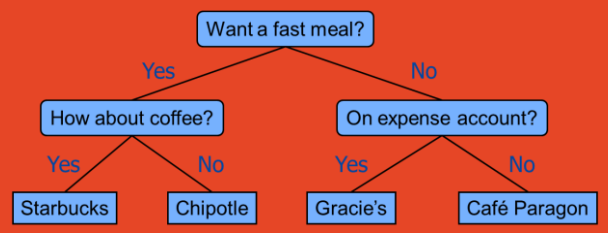

(A)

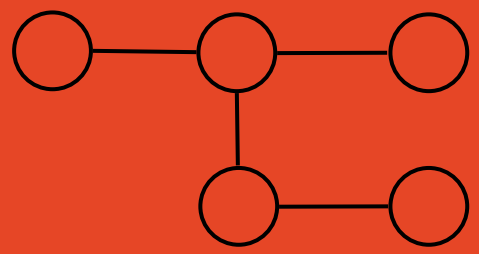

(B)

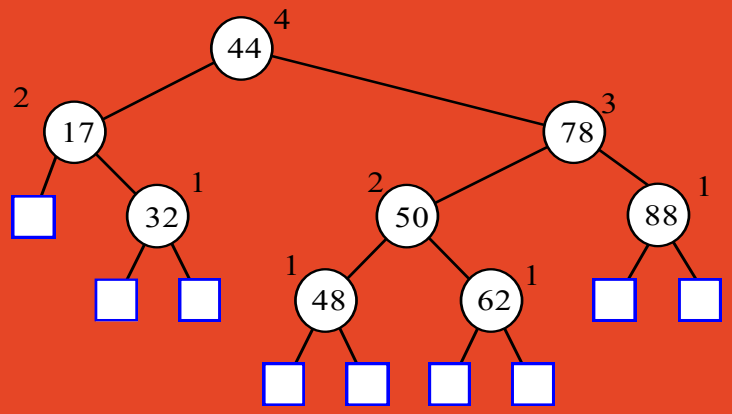

(C)

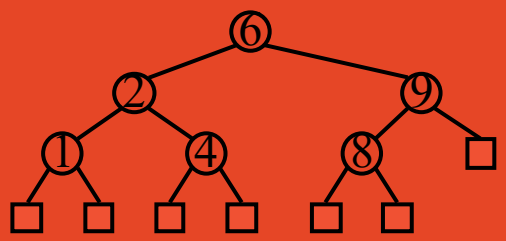

(D)

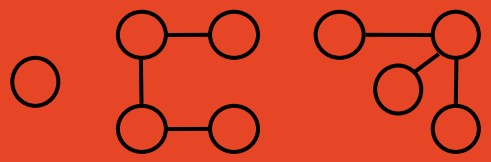

(E)

(F)

Graph ADT

We model the abstraction as a combination of three data types: Vertex, Edge, and Graph.

A Vertex stores an associated object (e.g., an airport code) that is retrieved with a getElement() method.

An Edge stores an associated object (e.g., a flight number, travel distance) that is retrieved with a getElement() method.

Directed Graph ADT

Undirected Graph alternatives

degree(v) ←

incidentEdges(v) ←

numVertices( ): Returns the number of vertices of the graph.

vertices( ): Returns an iteration of all the vertices of the graph.

numEdges( ): Returns the number of edges of the graph.

edges( ): Returns an iteration of all the edges of the graph.

getEdge(u, v): Returns the edge from vertex u to vertex v, if one exists; otherwise return null. For an undirected graph, there is no difference between getEdge(u, v) and getEdge(v, u).

endVertices(e): Returns an array containing the two endpoint vertices of edge e. If the graph is directed, the first vertex is the origin and the second is the destination.

opposite(v, e): For edge e incident to vertex v, returns the other vertex of the edge; an error occurs if e is not incident to v.

outDegree(v): Returns the number of outgoing edges from vertex v.

inDegree(v): Returns the number of incoming edges to vertex v. For an undirected graph, this returns the same value as does outDegree(v).

outgoingEdges(v): Returns an iteration of all outgoing edges from vertex v.

incomingEdges(v): Returns an iteration of all incoming edges to vertex v. For an undirected graph, this returns the same collection as does outgoingEdges(v).

insertVertex(x): Creates and returns a new Vertex storing element x.

insertEdge(u, v, x): Creates and returns a new Edge from vertex u to vertex v, storing element x; an error occurs if there already exists an edge from u to v.

removeVertex(v): Removes vertex v and all its incident edges from the graph.

removeEdge(e): Removes edge e from the graph.

Adjacency List

- sequence of vertices
- vertex object keeps track of its position in the sequence

Additionally each vertex keeps a sequence of edges incident on it

Edge objects keep reference to their position in the incidence sequence of its endpoints

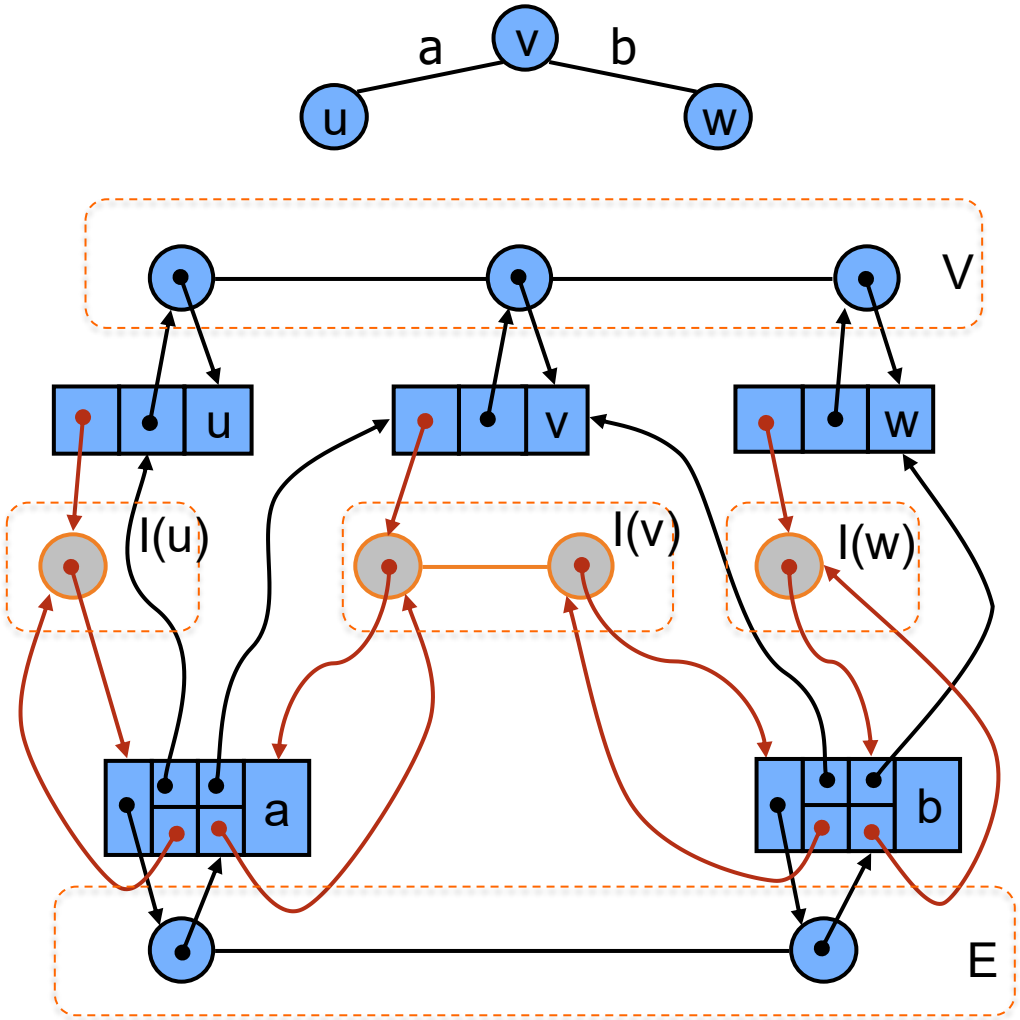

Adjacency List

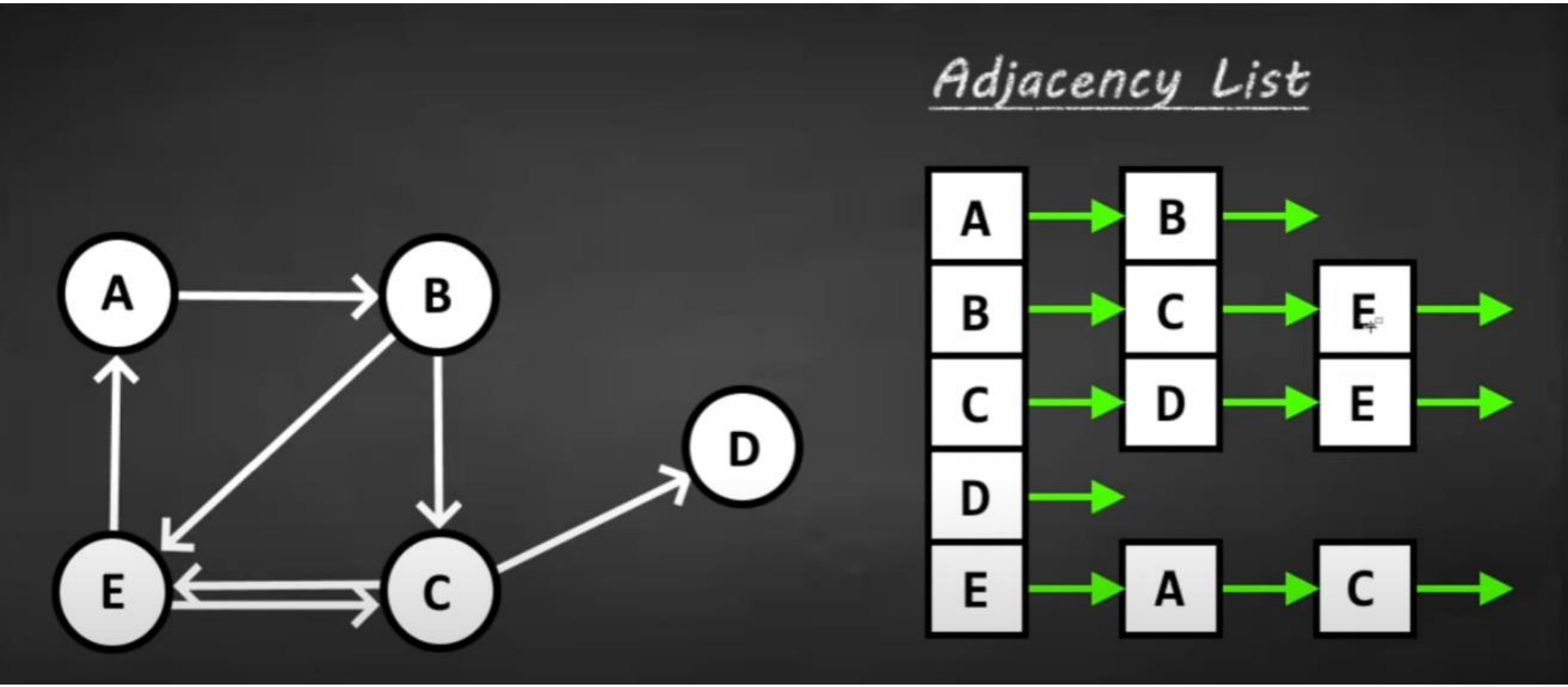

Credit: bro code yt channel

Adjacency Matrix Structure

Vertex array induces an index from 0 to n-1 for each vertex

2D-array adjacency matrix

- Reference to edge object for adjacent vertices
- Null for nonadjacent vertices

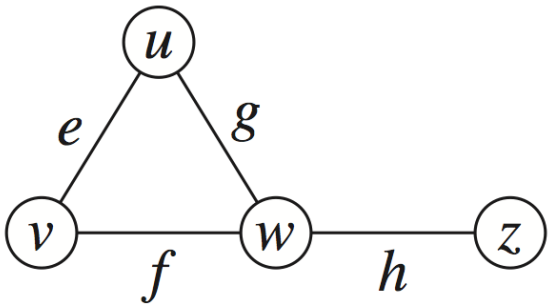

		0	1	2	3
$u \longrightarrow$	0		e	g	
$v \longrightarrow$	1	e		f	
$w \longrightarrow$	2	g	f		h
$z \longrightarrow$	3			h	

Asymptotic performance

▪ ***n*** vertices, ***m*** edges ▪ no parallel edges ▪ no self-loops	Adjacency List	Adjacency Matrix
Space	$O(n + m)$	$O(n^2)$
incidentEdges(***v***)	O(deg(***v***))	$O(n)$
getEdge(***u***, ***v***)	O(min(deg(***u***), deg(***v***)))	O(1)
insertVertex(***x***)	O(1)	$O(n^2)$
insertEdge(***u***, ***v***, ***x***)	O(1)	O(1)
removeVertex(***v***)	O(deg(***v***))	$O(n^2)$
removeEdge(***e***)	O(1)	O(1)

Challenge 8B

Try the Ed Lesson: Graphs (Adjacency List Implementation) and code along with the lecturer.

Graph traversals

A fundamental kind of algorithmic operation that we might wish to perform on a graph is traversing the edges and the vertices of that graph.

A traversal is a systematic procedure for exploring a graph by examining all of its vertices and edges.

For example, a web crawler, which is the data collecting part of a search engine, must explore a graph of hypertext documents by examining its vertices, which are the documents, and its edges, which are the hyperlinks between documents.

A traversal is efficient if it visits all the vertices and edges in linear time: $O(n+m)$ where n=number of vertices, m=number of edges.

Graph traversal techniques

A systematic and structured way of visiting all the vertices and all the edges of a graph

Two main strategies:

- Depth first search
- Breadth first search

Given adjacency list representation of the graph with n vertices and m edges both traversal run in $O(n + m)$ time

Depth-First Search (DFS)

This strategy tries to follow outgoing edges leading to yet unvisited vertices whenever possible, and backtrack if "stuck"

If an edge is used to discover a new vertex, we call it a DFS edge, otherwise we call it a back edge

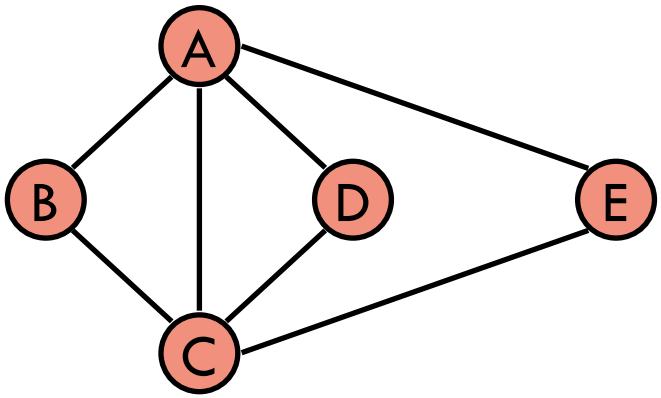

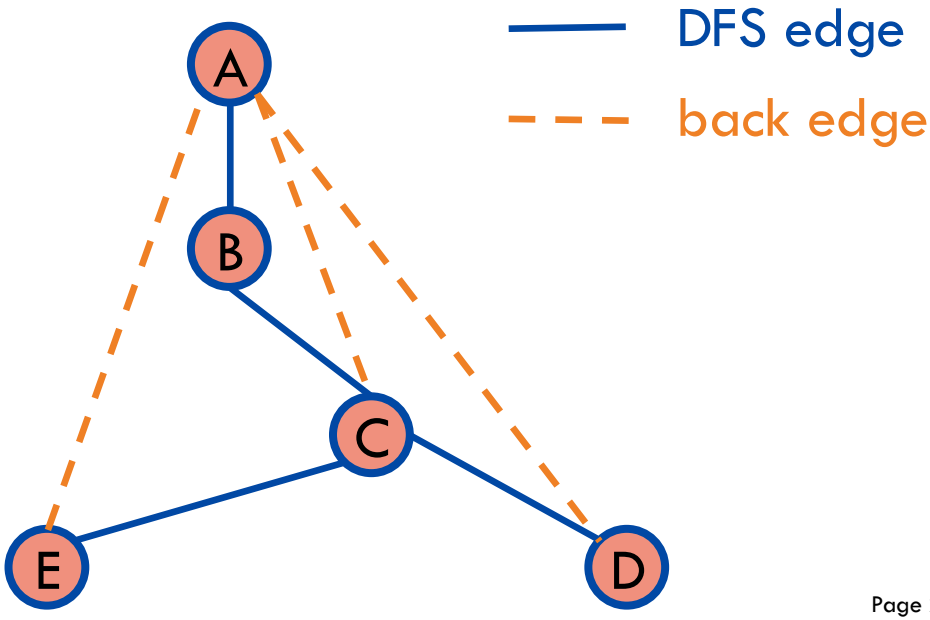

DFS pseudocode

```
def DFS(G):

  # set things up for DFS
  for u in G.vertices() do
    visited[u] ← False
    parent[u] ← None

  # visit vertices
  for u in G.vertices() do
    if not visited[u] then
      DFS_visit(u)

  return parent
```

```
def DFS_visit(u):

  visited[u] ← True

  # visit neighbors of u
  for v in G.incident(u) do
    if not visited[v] then
      parent[v] ← u
      DFS_visit(v)
```

Example

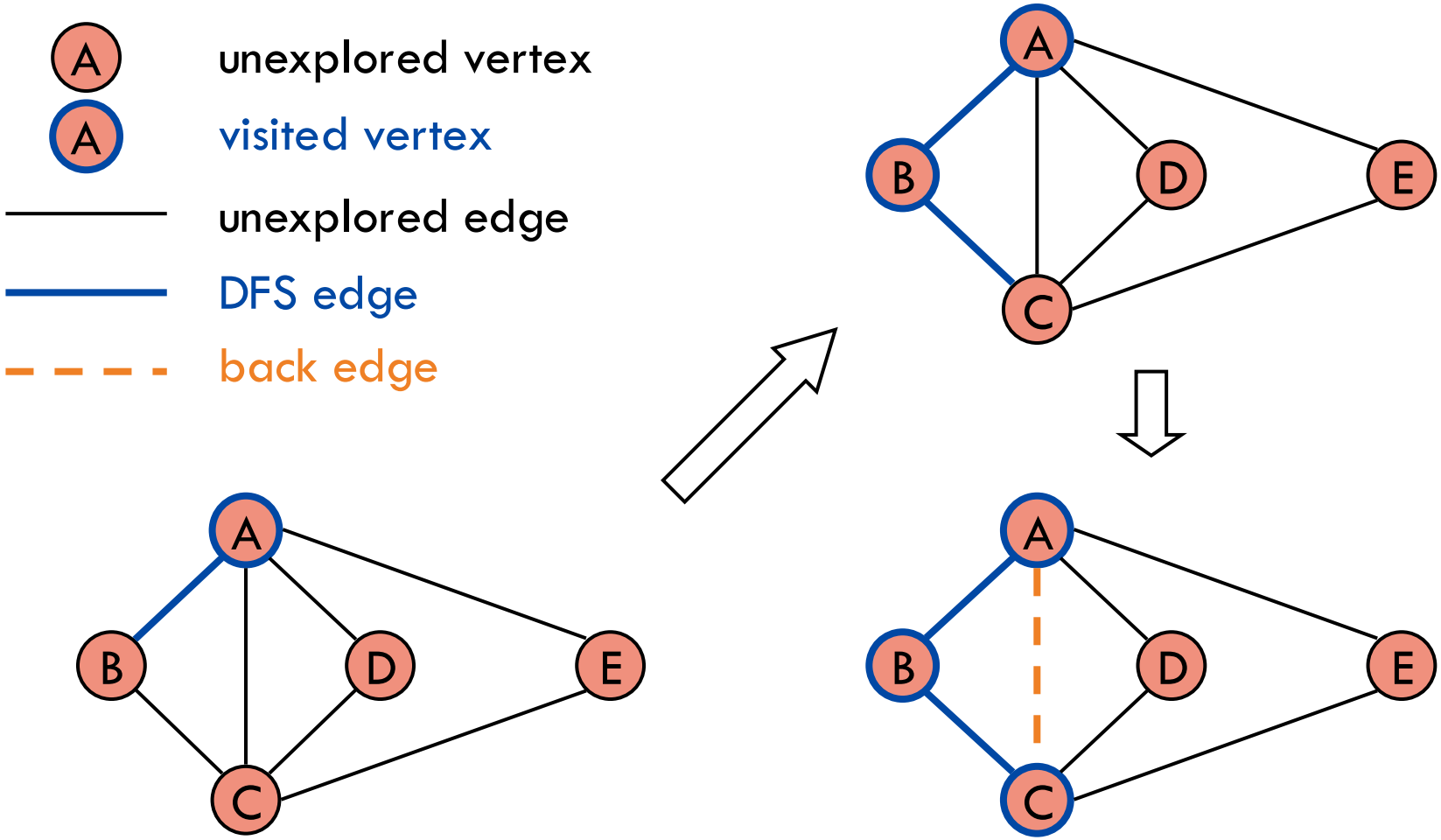
A
unexplored vertex
A
visited vertex
unexplored edge
DFS edge
back edge
A
B
D
E
C
A
B
D
E
C
A
B
D
E
C

Example (cont.)

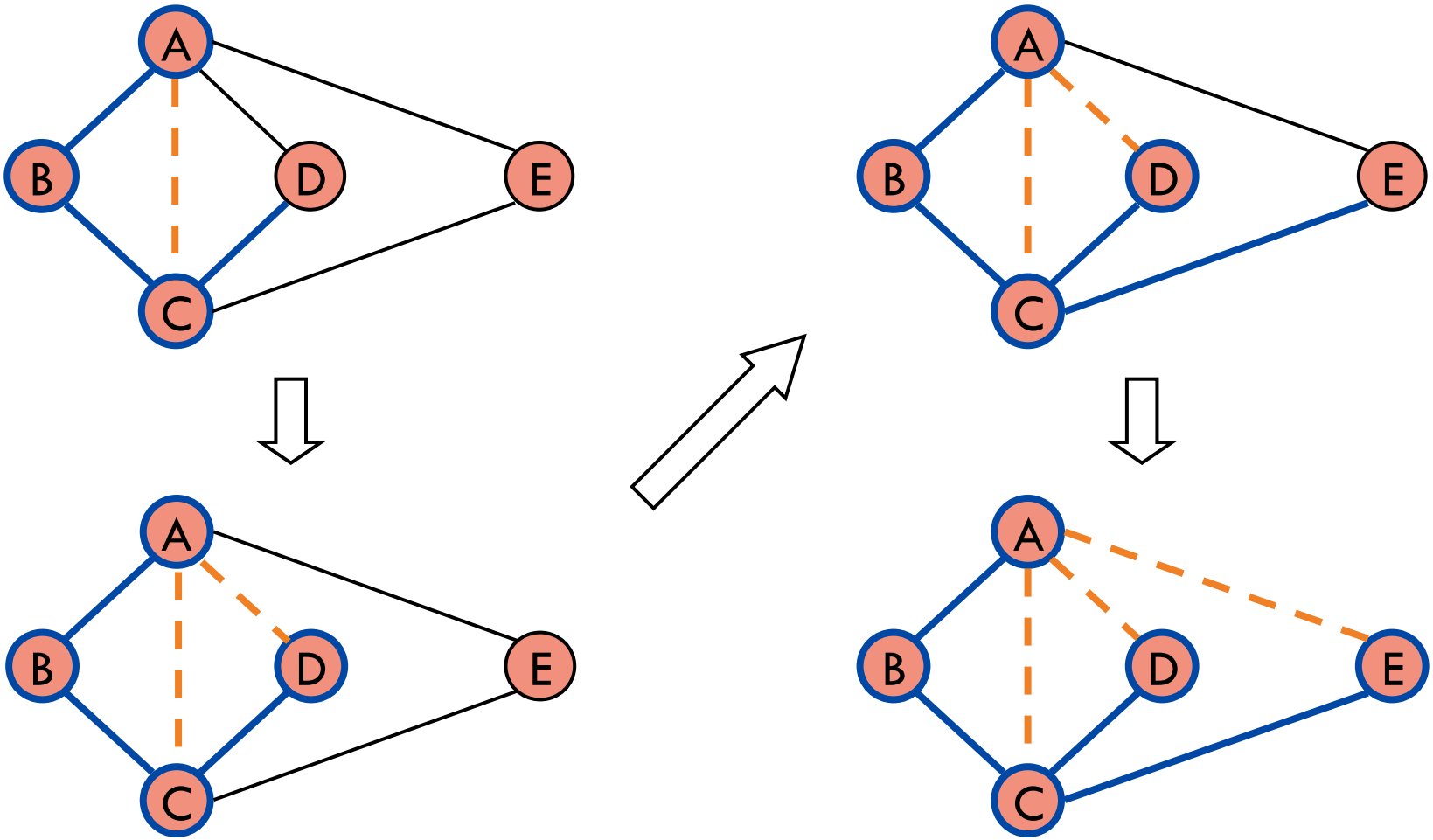

DFS main function performance

```
def DFS(G):

  # set things up for DFS
  for u in G.vertices() do
    visited[u] ← False
    parent[u] ← None

  # visit vertices
  for u in G.vertices() do
    if not visited[u] then
      DFS_visit(u)

  return parent
```

Assuming adjacency list representation

O(n) time

O(n) time not counting work done in DFS_visit

DFS_visit performance

Assuming adjacency list representation

$O(\deg(u))$ time not counting work done in recursive calls to DFS_visit

Thus, overall time is

$$O(\sum_u \deg(u)) = O(m)$$

```
def DFS_visit(u):

  visited[u] ← True

  # visit neighbors of u
  for v in G.incident(u) do
    if not visited[v] then
      parent[v] ← u
      DFS_visit(v)
```

Properties of DFS

Let C_v be the connected component of v in our graph G

Fact: DFS_visit(v) visits all vertices in C_v

Fact: Edges { (u, parent[u]): u in C_v } form a spanning tree of C_v

Fact: Edges { (u, parent[u]): u in V } form a spanning forest of G

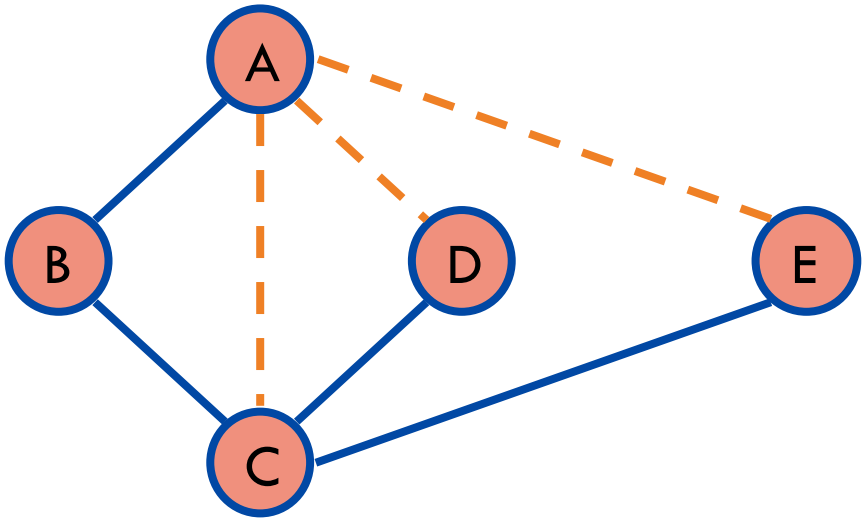

DFS Applications

DFS can be used to solve other graph problems in $O(n + m)$ time:

- Find a path between two given vertices, if any
- Find a cycle in the graph
- Test whether a graph is connected
- Compute connected components of a graph
- Compute spanning tree of a graph (if connected)

And is the building block of more sophisticated algorithms:

- testing bi-connectivity
- finding cut edges
- finding cut vertices

Identifying cut edges

In a connected graph $G=(V, E)$, we say that an edge (u, v) in E is a cut edge if $(V, E \setminus \{(u, v)\})$ is not connected

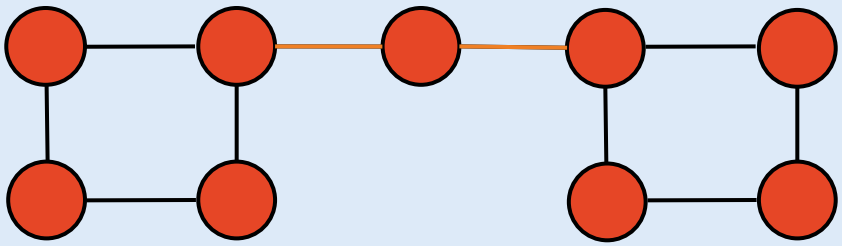

Identifying cut edges

In a connected graph $G=(V, E)$, we say that an edge (u, v) in E is a cut edge if $(V, E \setminus \{(u, v)\})$ is not connected

The cut edge problem is to identify all cut edges

Trivial $O(m^2)$ time algorithm: For each edge (u,v) in E, remove (u,v) and check using DFS if G is still connected, put back (u,v)

Better $O(nm)$ time algorithm: Only test edges in a DFS tree of G

Identifying cut edges in O(n+m) time

Compute a DFS tree of the input graph G=(V, E)

For every u in V, compute level[u], its level in the DFS tree

For every vertex v compute the highest level that we can reach by taking DFS edges down the tree and then one back edge up. Call this down_and_up[v]

Fact: A DFS edge (u, v) where u = parent[v] is not a cut edge if and only if down_and_up[v] ≤ level[u]

Basis of an O(n+m) time algorithm for finding cut edges

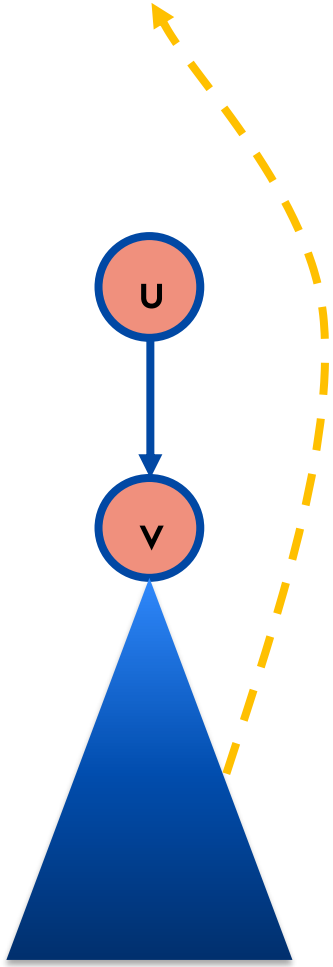

Identifying cut edges in O(n+m) time

Compute a DFS tree of the input graph G=(V, E)

For every u in V, compute level[u], its level in the DFS tree

For every vertex v compute the highest level that we can reach by taking DFS edges down the tree and then one back edge up. Call this down_and_up[v]

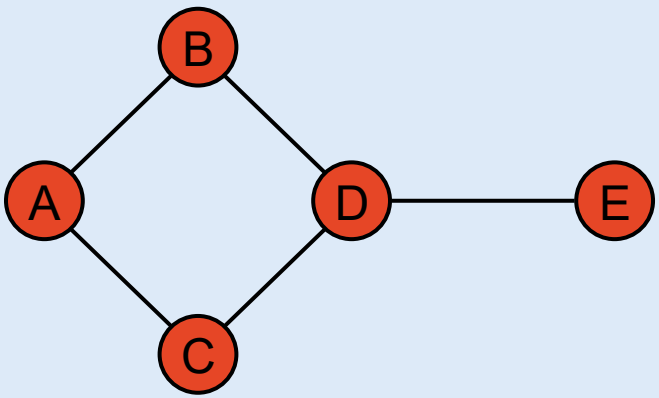

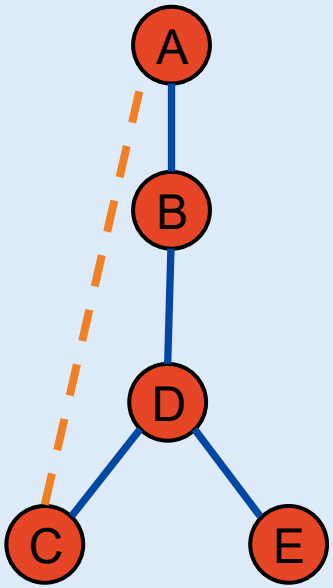

	level	d&u
A	0	0
B	1	0
C	3	0
D	2	0
E	3	3

Breadth-First Search (BFS)

This strategy tries to visit all vertices at distance k from a start vertex s before visiting vertices at distance k + 1:

- $L_0 = \{s\}$
- L_1 = vertices one hop away from s
- L_2 = vertices two hops away from s but no closer

⋮

- L_k = vertices k hops away from s but no closer

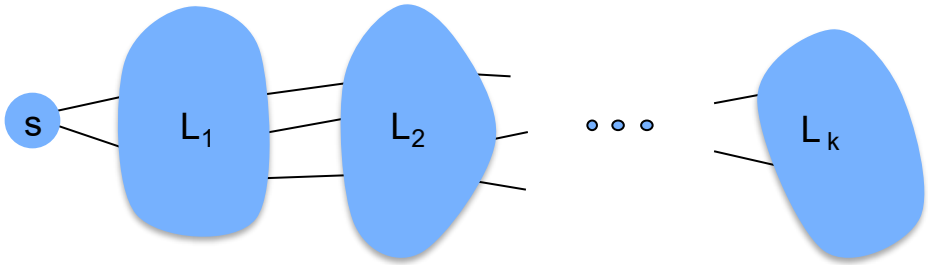

BFS

```
def BFS(G,s):

  # set things up for BFS
  for u in G.vertices() do
    seen[u] ← False
    parent[u] ← None

  seen[s] ← True
  layers ← []
  current ← [s]
  next ← []

  # process current layer
  while not current.is_empty() do
    layers.append(current)
    # iterate over current layer
    for u in current do
      for v in G.incident(u) do
        if not seen[v] then
          next.append(v)
          seen[v] ← True
          parent[v] ← u
    # update current & next layers
    current ← next
    next ← []

  return layers, parent
```

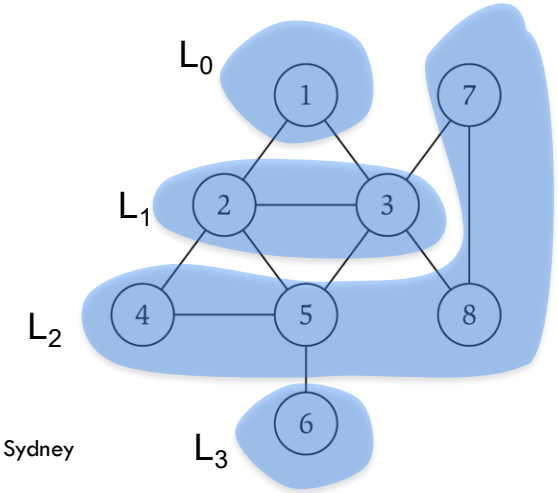

Example

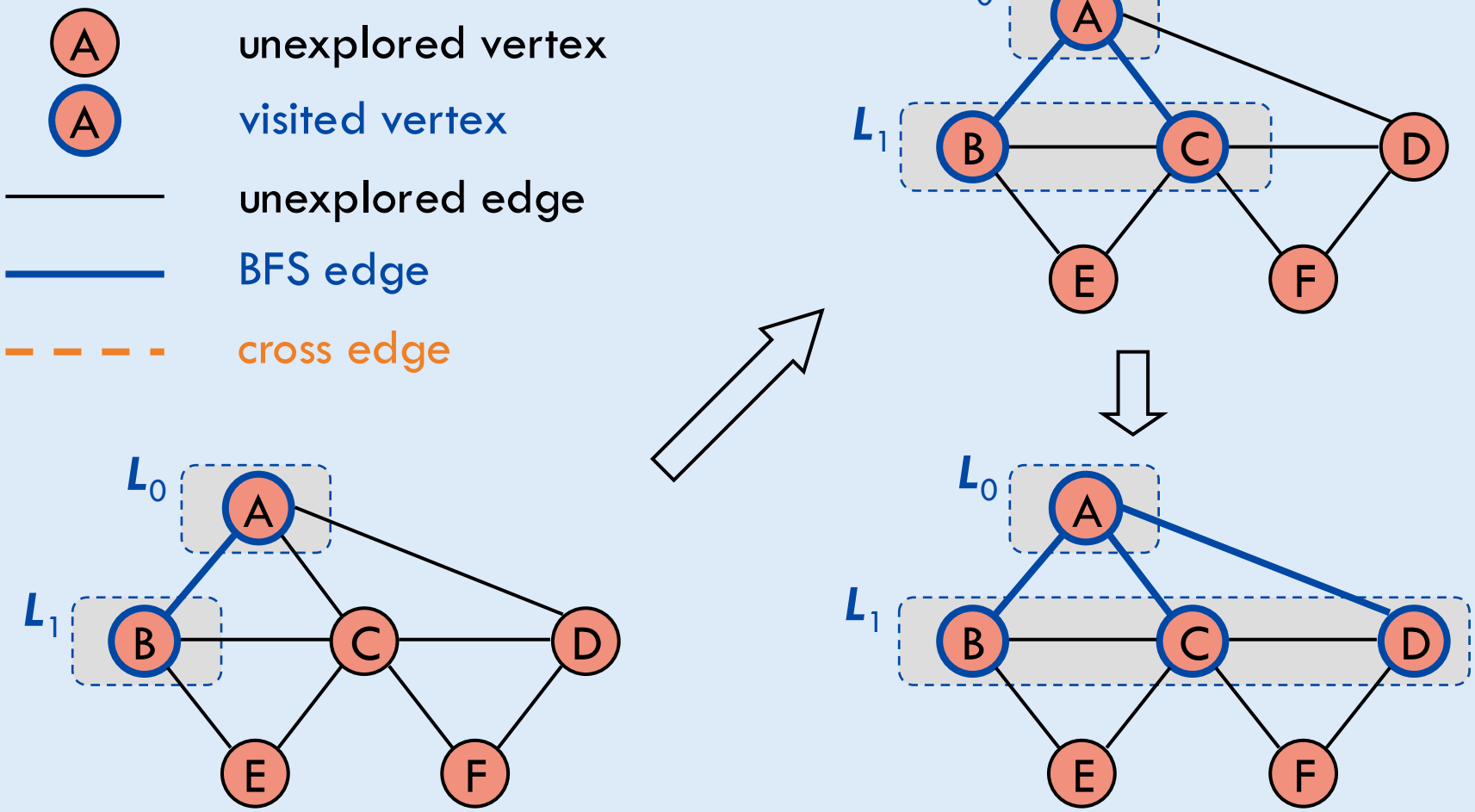
A
unexplored vertex
A
visited vertex
unexplored edge
BFS edge
cross edge
L_0
L_1
A
B
C
D
E
F

Example (cont.)

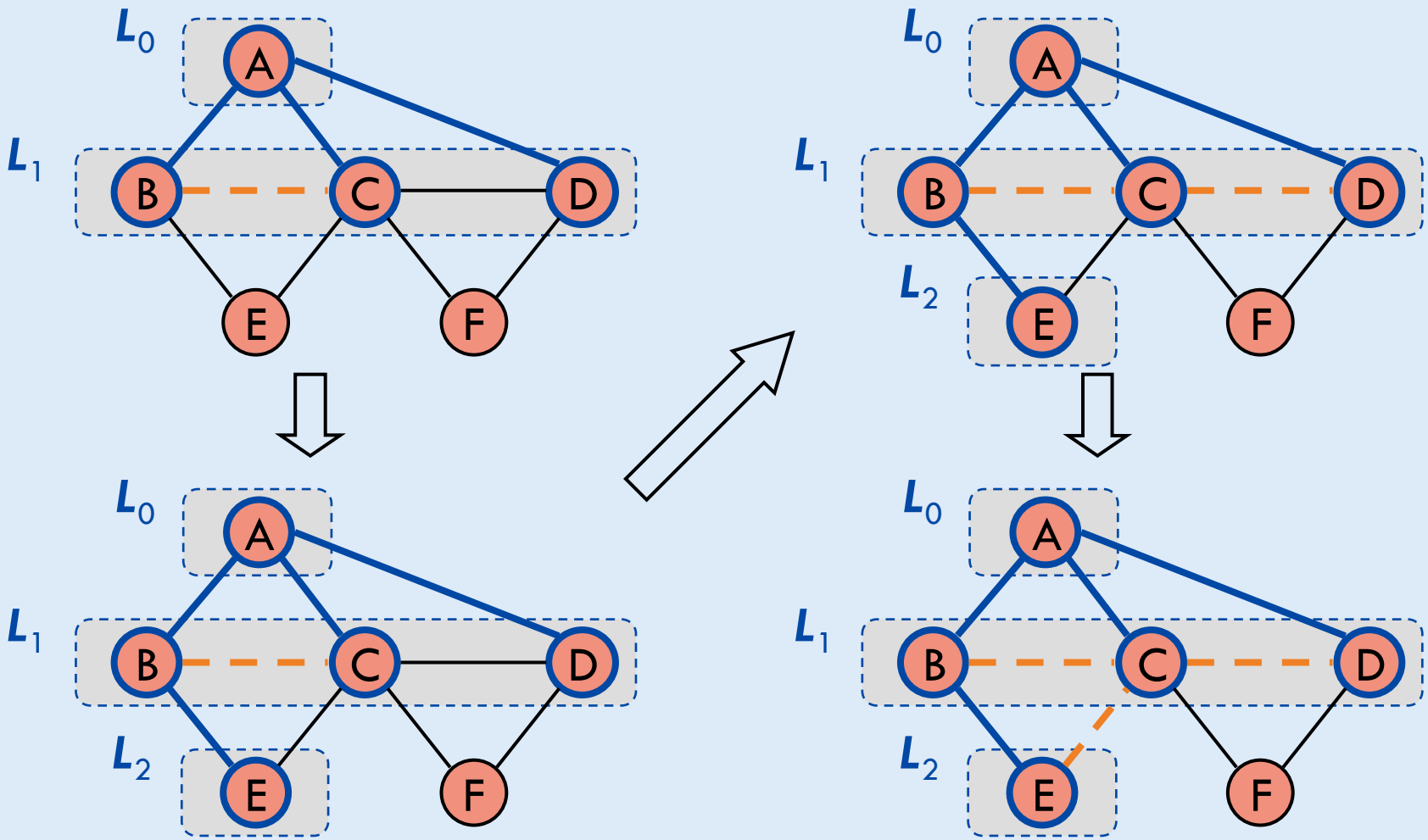

Example (cont.)

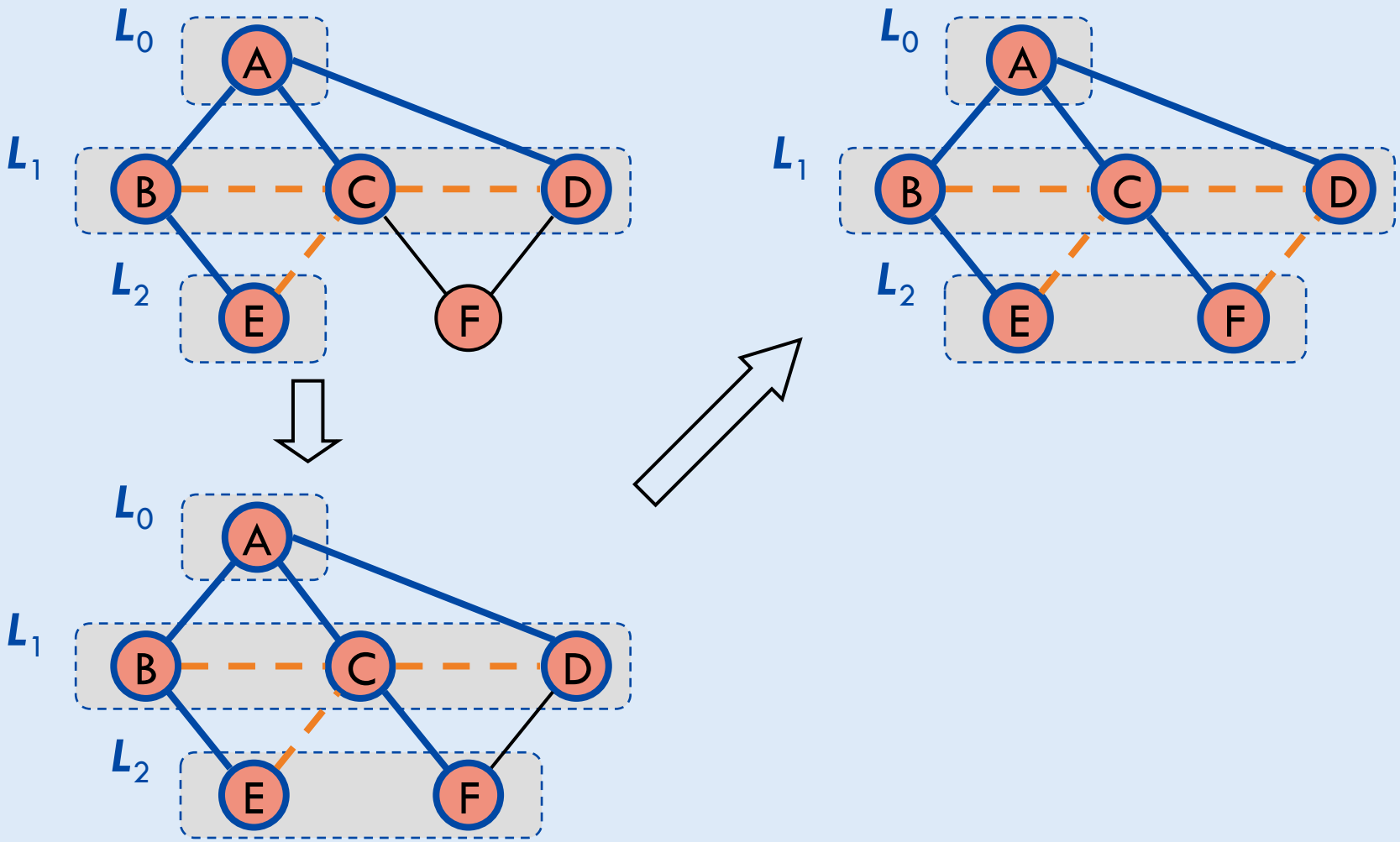

Properties

Let C_v be the connected component of v in our graph G

Fact: BFS(G, s) visits all vertices in C_s

Fact: Edges { (u, parent[u]): u in C_s } form a spanning tree T_s of C_s

Fact: For each v in L_i there is a path in T_s from s to v with i edges

Fact: For each v in L_i any path in G from s to v has at least i edges

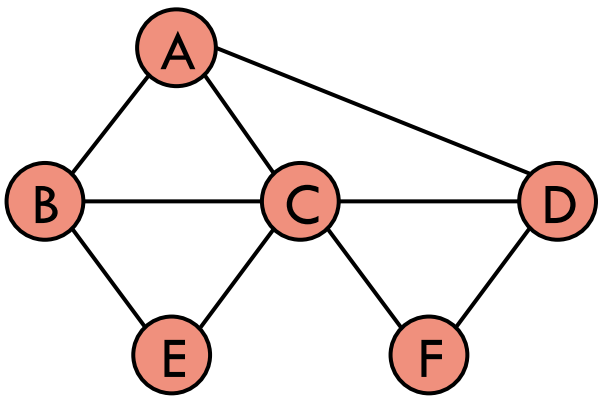

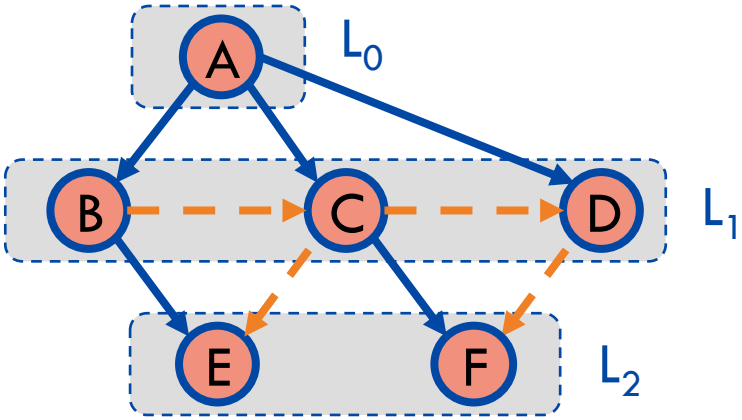

BFS performance

```
def BFS(G,s):

  # set things up for BFS
  for u in G.vertices() do
    seen[u] ← False
    parent[u] ← None

  seen[s] ← True
  layers ← []
  current ← [s]
  next ← []

  # process current layer
  while not current.is_empty() do
    layers.append(current)
    # iterate over current layer
    for u in current do
      for v in G.incident(u) do
        if not seen[v] then
          next.append(v)
          seen[v] ← True
          parent[v] ← u
    # update curr and next layers
    current ← next
    next ← []

  return layers
```

$O(n)$ time

$O(\sum_u \deg(u)) = O(m)$ time

BFS performance

Fact: Assuming adjacency list representation we can perform a BFS traversal of a graph with n vertices and m edges in O(n+m) time

Fact: Assuming adjacency matrix representation we can perform a BFS traversal of a graph with n vertices and m edges in $O(n^2)$ time

The additional attributes about the vertices (seen and parent) can be associated directly via Vertex class or we can use an external map data structure

BFS Applications

BFS can be used to solve other graph problems in $O(n + m)$ time:

- Find a shortest path between two given vertices
- Find a cycle in the graph
- Test whether a graph is connected
- Compute a spanning tree of a graph (if connected)

And is the building block of more sophisticated algorithms:

- Testing if graph is bipartite

Tutorial Warm Up

Problem 1. Consider the following undirected graph.

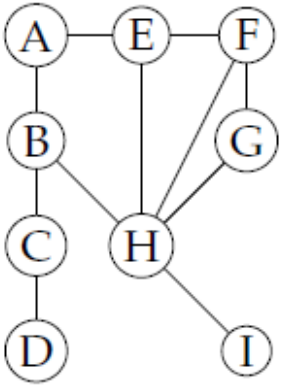

a) Starting from A, give the layers the breadth-first search algorithm finds.

b) Starting from A, give the order in which the depth-first search algorithm visits the vertices.

DFS vs. BFS

Applications	DFS	BFS
Spanning forest, connected components, paths, cycles	√	√
Shortest paths		√
Cut edges	√	

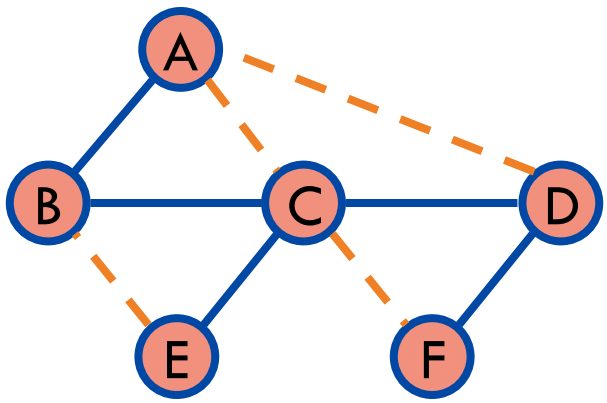

DFS

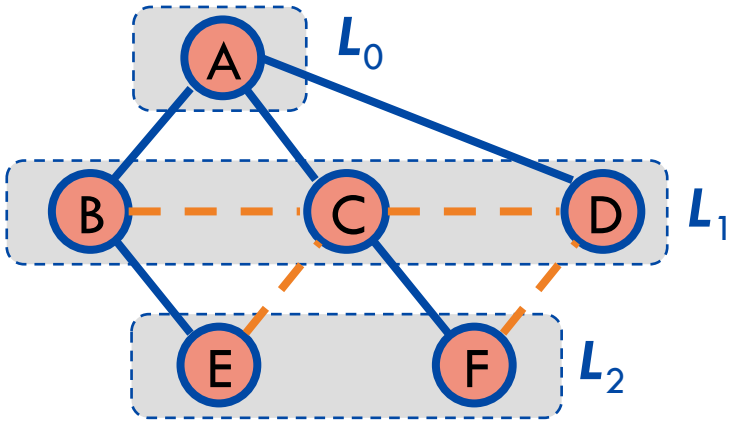

BFS

DFS Visualization (click here)

BFS Visualization (click here)

Terminology (Undirected graphs)

- Edges connect endpoints
  e.g., W and Y for edge f
- Edges are incident on endpoints
  e.g., a, d, and b are incident on V
- Adjacent vertices are connected
  e.g., U and V are adjacent
- Degree is # of edges on a vertex
  e.g., X has degree 5
- Parallel edges share same endpoints
  e.g., h and i are parallel
- Self-loop have only one endpoint
  e.g., j is a self-loop
- Simple graphs have no parallel or self-loops

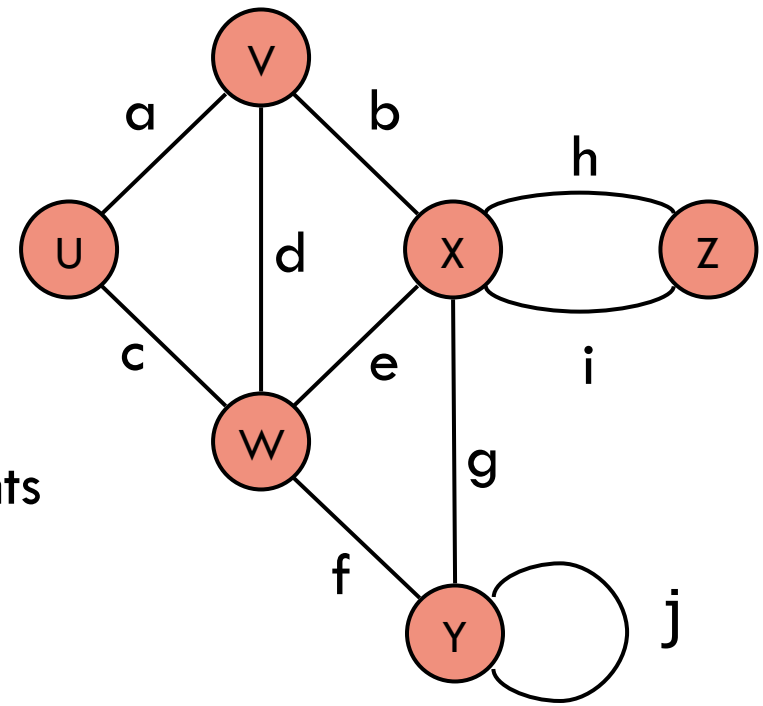

Terminology (Directed graphs)

- Edges go from tail to head
  e.g., W is the tail of c and U its head
- Out-degree is # of edges out of a vertex
  e.g., W has out-degree 2
- In-degree is # of edges into a vertex
  e.g., W has in-degree 1
- Parallel edges share tail and head
  e.g., no parallel edge on the right
- Self-loop have same head and tail
  e.g., X has a self-loop
- Simple directed graphs have no parallel or self-loops, but are allowed to have anti-parallel loops like f and a

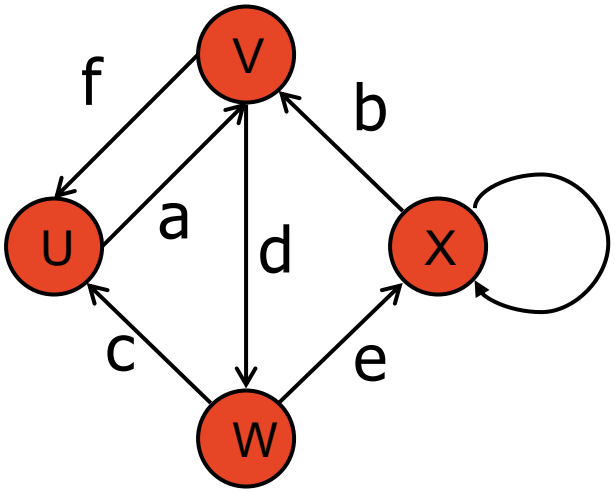

Discovery Activity: Social Network

We are going to use Graphs to build a simple social network called mispace and analyze its properties.

1. Create a simple Graph of 6 users where 1 user has 3 friends and the other 2 users are friends of friends and also friends.
2. Should this be a directed or undirected graph?
3. Represent your network as an adjacency list or adjacency matrix.
4. Can you identify any cut edges in your Graph? Does your Social Network still function if that edge is removed?
5. Would you use DFS or BFS to traverse the Social Network?

Discovery Activity: Social Network

We are going to use Graphs to build a simple social network called mispace and analyze its properties.

1. Create a simple Graph of 6 users where 1 user has 3 friends and the other 2 users are friends of friends and also friends.
2. Should this be a directed or undirected graph?

Discovery Activity: Social Network

We are going to use Graphs to build a simple social network called mispace and analyze its properties.

3. Represent your network as an adjacency list or adjacency matrix.
4. Can you identify any cut edges in your Graph? Does your Social Network still function if that edge is removed?
5. Would you use DFS or BFS to traverse the Social Network?